PRODUCT INFORMATION

FLOWSIC600-XT

THE PERFECT MATCH

Gas flow meters

SICK
Sensor Intelligence.

FLOWSIC600-XT: THE PERFECT MATCH

Just how can the market leader for reliable, maximum precision ultrasonic gas flow measuring devices get any better? The answer is easy: by carefully listening to and consistently responding to the requirements of individual users.

With four device versions, the FLOWSIC600-XT is able to meet any application requirement as a stand-alone or system solution – and deliver best possible measuring performance at the same time. Along with its groundbreaking design, this product family impresses with innovative intrinsic value: i-diagnostics™ the built-in solution, which delivers intelligent application diagnostics and PowerIn Technology™ continues to take measurements and save valuable data for up to three weeks in the event of a mains power failure. FLOWSIC600-XT delivers the ideal combination of maximum measurement accuracy, long-term stability, and unrivaled operational safety, yet is entirely unassuming.

8018938/2017-12

Subject to change without notice

Measurement data reliability and availability

The FLOWSIC600 ultrasonic gas flow measuring device already provides best-in-class long-term stability in extreme ambient conditions, and now the FLOWSIC600-XT combines the features of its predecessor with unprecedented usability. It meets all the requirements for safe and stable custody transfer gas measurement throughout its service life. Measurement and diagnostics data and status changes can be recorded permanently in six accessible data archives, and the FLOWSIC600-XT's PowerIn Technology™ ensures that measurements continue to be taken and data stored in the event of a mains power failure.

Simple device integration – even in compact systems

Continuous improvement of ultrasound technologies is a tradition at SICK, Germany. The FLOWSIC600-XT boasts state-of-the-art measurement technology, meaning it delivers extremely precise measurement results. Compliant with ISO 17089 and AGA9 and compatible with its predecessor the FLOWSIC600, it can be integrated successfully into any system. Plus, the new FLOWSIC600-XT Forte meets the requirements of compact installations and complies with all of the specifications of OIML R 137 Classes 1.0 and 0.5.

Quick and easy device commissioning and checks

i-diagnostics™ helps make device commissioning and status checks quick and easy, and provides extensive flow meter and application diagnostics during operation. Should maintenance ever be required, the intelligent solution assistant provides support. The built-in infrared interface means measured value and diagnostics data can be accessed in no time, making servicing quick and efficient.

8018938/2017-12
Subject to change without notice

FLOWSIC600-XT – PROVIDING YOU WITH THE PERFECT GAS FLOW METER FOR ANY APPLICATION

Each of the ultrasonic gas flow meters in the FLOWSIC600-XT product family has been designed for custody transfer applications and fulfills the requirements of all the common national and international standards. There are four device versions to choose from to meet specific gas flow meter performance requirements. Determining which one to use varies, which is why our performance-oriented classification of the FLOWSIC600-XT, -XT Forte, -XT 2plex, and -XT Quatro is the ideal first step in ensuring there is a focus on the task at hand and customer requirements, allowing a unique solution to be provided. All of the FLOWSIC600-XT versions can be installed with ease into any custody transfer measurement application with a nominal width of between 3 and 48 inches, and they can also be conveniently connected to all of the most popular flow computers on the market.

FLOWSIC600-XT

The FLOWSIC600-XT has proven to be a versatile device suitable for all custody transfer natural gas applications, with 15 years of field experience gained from the FLOWSIC600 having been incorporated into this four-path technology.

FLOWSIC600-XT Forte

Providing impressive meter performance in a limited space and combining eight paths on two different path levels in one device, the FLOWSIC600-XT Forte guarantees maximum measurement accuracy. It is the natural first choice for installations in systems with short inlet and outlet piping.

FLOWSIC600-XT 2plex

The extremely compact FLOWSIC600-XT 2plex is the combination of a gas flow meter for custody transfer applications and a check measurement device, featuring extended diagnostic functionality thanks to its additional independent measurement path.

FLOWSIC600-XT Quatro

The FLOWSIC600-XT Quatro combines two measurement devices for redundant measurements in custody transfer natural gas applications in one, with an installation length equivalent to that of a single device.

Quick and easy data access

In addition to its numerous interfaces, the FLOWSIC600-XT also enables quick and easy access to measured value and diagnostics data thanks to the infrared communications port built into its front display. All of the necessary settings and device data are accessible via this interface. The FLOWSIC600-XT can also be extended for wireless communication.

PowerIn Technology™ – data security guaranteed

Operating with an extremely low power consumption and measurement algorithms that have been further optimized, the FLOWSIC600-XT is setting new standards for ultrasonic gas flow meters. It boasts a highly efficient energy concept, including a backup battery that guarantees a continuous power supply even in the event of a mains power failure. If this does happen, the power consumption of all of the electronics is automatically reduced to the minimum level possible. We call this PowerIn Technology™. It makes sure that measurements can continue to be taken for up to three weeks without the need for external power and saves important measurement data. This extremely efficient electronics concept is forward-thinking in the way it allows for autonomous device operation, for example using a solar power supply.

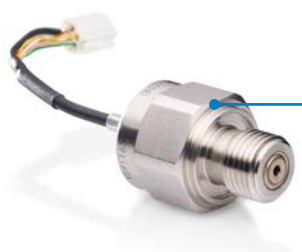

Automatic correction of measured values under changing operating conditions

The FLOWSIC600-XT provides even more accurate measurements than its predecessor, with its integrated geometry and Reynolds number correction function boosting measurement accuracy under changing pressure and temperature conditions. Another advantage of the integrated pressure and temperature correction function is the ease and safety with which calibration conditions can be transferred over to application conditions. The pressure and temperature values required to enable this feature are provided by built-in sensors, transmitters externally connected via HART, or a flow computer.

8018938/2017-12
Subject to change without notice

i-diagnostics™ – an essential tool for effective and efficient device and application diagnostics

i-diagnostics™ has so much more to offer than just diagnostics – it is an intelligent combination of firmware and software that means the device is safe, reliable, and easy to use for the entire operating time. i-diagnostics™ builds on the FLOWSIC600's CBM (condition based maintenance) smart self-diagnosis functionality, providing useful information about the system status and any changes to it, in addition to device diagnostics. In order to assess the application, diagnostics data from cross-eyed beams is first factored in, with application faults, such as blocked flow conditioners, background noise, contamination, and liquids in the gas, being detected immediately – making lengthy troubleshooting a thing of the past. Process data is constantly assessed on the basis of the integrated FingerPrint concept. This means that the measurement conditions during calibration can be compared with the measurement conditions during commissioning and with the current measurement and diagnostics data. An internal data logger continuously logs measured values for trend analyses to allow the historical measurement processes to be checked, as well as the results of the self-monitoring. A retroactive thorough check of the measurement process in the form of a graphic trend analysis is also possible.

FLOWgate™ – new and intuitive operating software

FLOWgate™ intelligently links diagnostics data together and then displays it. The quick status function provides immediate information about the current status of the application, and if a warning limit is reached, the solution assistant can be used to analyze the problem at the click of a button. In order to get a quick overview or analysis, each user can put together measured values and diagnostics parameters as required in the measured value overview, and then amend or save their overview. FLOWgate™ allows the FLOWSIC600-XT, and in turn all of the measured value and diagnostics data, to be accessed at any time via a PC or tablet – whether online or offline. The graphical display of trend analyses in charts facilitates the analysis of the measurement process and provides information on changes to the process. Concise diagnostics, maintenance, and calibration reports can be created at any time using the report manager, while a range of wizards, including one for commissioning, make it much easier to operate the device.

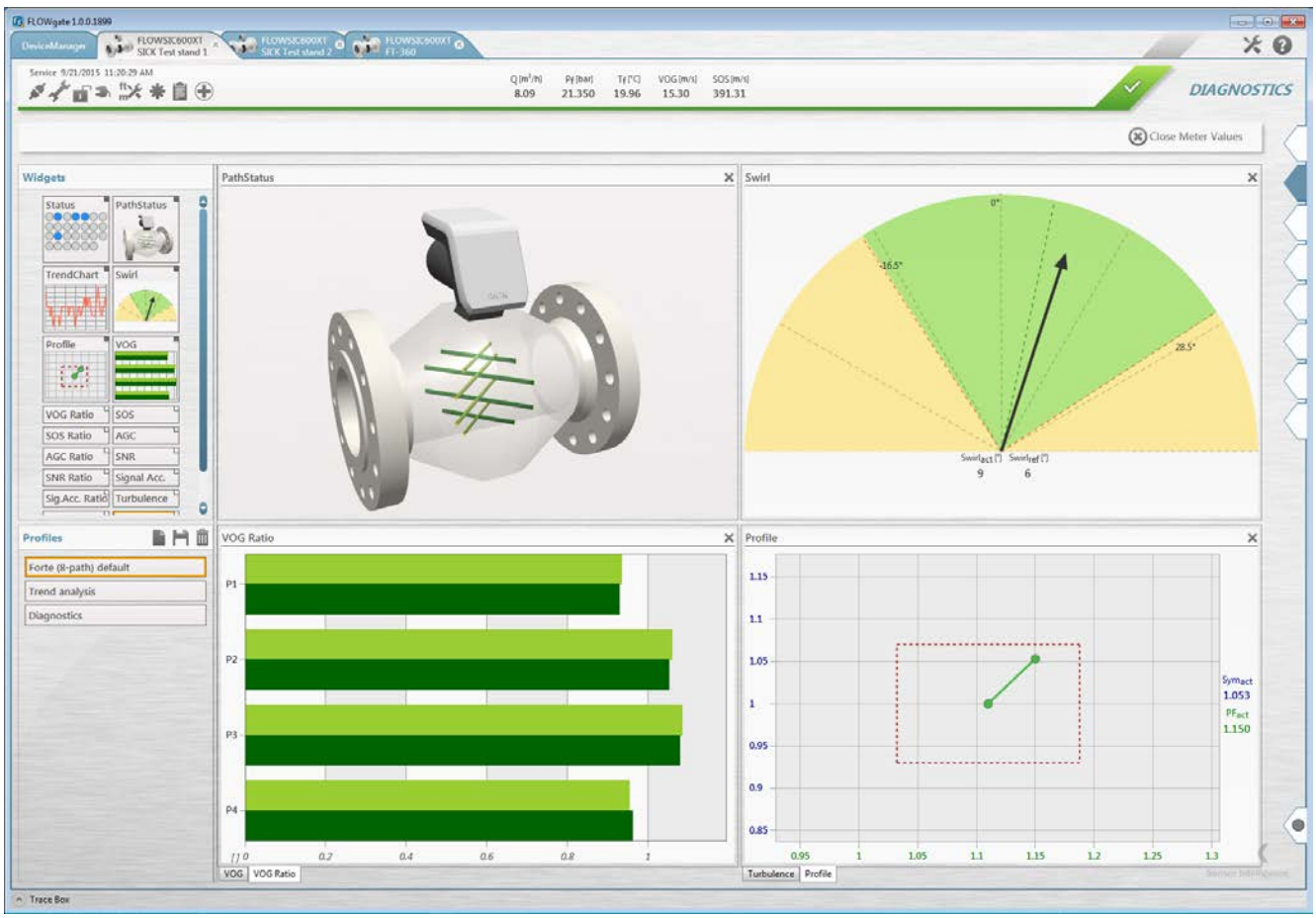

FLOWgate™ overview

THE PERFECT MATCH

Product description

As the follow-up to the successful FLOWSIC600, the FLOWSIC600-XT ultrasonic gas flow measuring device is setting new standards in its market segment.The FLOWSIC600-XT is available in variants with 4, 4+1, 4+4, and 8 measurement paths to meet the requirements of every application, whether it is being used as a stand-alone or system solution. In addition to the OIML R 137 Class 1.0 requirements, the FLOWSIC600-XT meets the requirements of Class 0.5 and AGA9 in their entirety.

The FLOWSIC600-XT contains i-diagnostics™ – an intelligent application diagnostics function – and PowerIn Technology™, which enables continuous measurement operation for up to three weeks in the event of a mains voltage failure. These functions help ensure usability and unparalleled operational safety – and what''s more, the equipment offers the very best possible measurement accuracy and long-term stability.

At a glance

- User-friendly product family
- Automatic correction of pressure and temperature effects
- Available for all operating conditions
- PowerIn Technology™ for reliable backup operation
- Intelligent application diagnostics with i-diagnostics™
- Extendable with flow computers per connect-and-go

Your benefits

- Low measurement uncertainty in every application
- Excellent measurement data reliability and availability
- The right ultrasonic gas flow measuring device for every application – without compromise
- Simple device integration – even in compact systems
- Quick and easy commissioning and checks

Additional information

→ www.sick.com/FLOWSIC600-XT

For more information, simply visit the above link to obtain direct access to technical data, CAD design models, operating instructions, software, application examples, and much more.

8018938/2017-12
Subject to change without notice

Fields of application

- Custody transfer measurement of natural gas
- Transport and storage of gas
- Onshore and offshore applications
- Gas production applications with H_2S and CO_2 content

Detailed technical data

The exact device specifications and performance data of the product may deviate from the information provided here, and depend on the application in which the product is being used and the relevant customer specifications.

System

Measured values	Volumetric flow, a. c., volume a. c., gas velocity, sound velocity, Optional volume correction via integrated EVC
Number of measuring paths	4, 4+1 (2plex), 4+4 (Quatro), 8 (Forte)
Measurement principle	Ultrasonic transit time difference measurement
Measuring medium	Natural gas, air, natural gases with contents of CO_2, N_2, H_2S, O_2
Measuring ranges	
Q_{min} from ... to	5 ... 750 m³/h
Q_{max} from ... to	1,000 ... 120,000 m³/h
	Measuring ranges depend on nominal pipe size
Repeatability	≤ 0.05 % of the measured value
Accuracy	
	Error limits Q_t ... Q_{max}
4-path and 8-path version:	≤ ± 0.5 % Dry calibrated
4-path and 8-path version:	≤ ± 0.2 % After flow calibration and adjustment with constant factor. Without uncertainty of the calibration test facility.
4-path and 8-path version:	≤ ± 0.1 % After flow calibration and adjustment with polynomial or piecewise correction. Without uncertainty of the calibration test facility.
Min. piping requirements	
4-path version	According OIML Class 1.0: with straight inlet section of ≥ 10D or ≥ 5D with flow conditioner According OIML Class 0.5: with straight inlet section of ≥ 10D and flow conditioner
8-path version	According OIML Class 1.0: with straight inlet section of ≥ 2D According OIML Class 0.5: with straight inlet section of ≥ 5D
	For details see operating instructions
Diagnostics functions	i-diagnostics™: integrated device diagnostics and intelligent extended device and application diagnostics via FLOWgate™ software
Gas temperature	
	–40 °C ... +180 °C
On request:	–194 °C ... +280 °C
Operating pressure	0 bar (g) ... 160 bar (g) On request: 0 bar (g) ... 450 bar (g)
Nominal pipe size	
	3 ″ ... 56 ″ (DN 80 ... DN 1400), other nominal pipe sizes on request
Ambient temperature	
	–40 °C ... +70 °C (–60 °C ... +70 °C with enclosure for electronics)
Storage temperature	–40 °C ... +70 °C (-60 °C ... +70 °C meter body only)
Ambient humidity	≤ 95 % Relative humidity; non-condensing

Conformities	OIML R 137-1&2:2012 OIML D 11:2013 ISO 17089-1 AGA-Report No. 9 MID: 2014/32/EU PED: 2014/68/EU ATEX: 2014/34/EU EMC: 2014/30/EU GOST 8.611-2013 GOST 8.733-2011
Ex-approvals	
IECEx	Ex db ia op is [ia Ga] IIA/IIC T4 Gb Ex db eb ia op is [ia Ga] IIA/IIC T4 Gb Ex ia op is IIA/IIC T4 Ga Ex ia nA op is IIC T4 Gc
ATEX	II 2 (1) G Ex db ia op is [ia Ga] IIA/IIC T4 Gb II 2 (1) G Ex db eb ia op is [ia Ga] IIA/IIC T4 Gb II 1G Ex ia op is IIA/IIC T4 Ga II 3G Ex ia nA op is IIC T4 Gc
NEC/CEC (US/CA)	Explosion-proof / non-incendive: Cl I, Div. 1 Group D, T4 / Ex d ia [ia Ga] IIA T4 Gb / Cl I, Zone 1 AEx d ia op is [ia Ga] IIA T4 Gb Cl I, Div. 1 Groups A, B, C, D, T4 / Ex ia IIC T4 Ga / Cl I, Zone 0, AEx ia op is IIC T4 Ga Cl I, Div. 1 Groups B, C, D, T4 / Ex d ia [ia Ga] IIC T4 Gb / Cl I, Zone 1 AEx d ia op is [ia Ga] IICT4 Gb Intrinsically safe: Cl I, Div. 1 Group D T4 / Ex ia IIA T4 Ga / Cl I, Zone 0, AEx ia op is IIA T4 Ga Cl I, Div. 1 Groups A, B, C, D, T4 / Ex ia IIC T4 Ga / Cl I, Zone 0, AEx ia op is IIC T4 Ga Non-incendive Cl I, Div. 2 Groups A, B, C, D, T4 / Ex ia nA IIC T4 Gc / Cl I, Zone 2, AEx ia nA op is IIC T4 Gc
Enclosure rating	IP66 / IP67
Analog outputs	1 output: 4 ... 20 mA, ≤ 250 Ω Active/passive, electrically isolated
Digital outputs	4 outputs: 2 x status, 2 x pulse ≤ 30 V, 50 mA Passive, electrically isolated, Open Collector or according to NAMUR (EN 50227), f_{max} = 10 kHz (scalable)
Modbus	✔
Type of fieldbus integration	TCP RTU RS-485 (3x) ASCII RS-485 (3x)
Ethernet	✔
Remark	Option
HART	✔
Remark	HART master (for connection of external pressure and temperature transmitters)
Optical interface	✔
Remark	Service interface (IR, according IEC 62056-21)
Serial	✔
Remark	Encoder
Operation	Via display and software FLOWgate™
Dimensions (W x H x D)	See dimensional drawings and tables
Weight	See table “Dimensions”
Material in contact with media	Low temperature carbon steel, stainless steel, duplex steel

Electrical connection	
Voltage	Electrically isolated: 12 ... 24 V DC Intrinsically safe: 6 ... 16 V DC PowerIn technology™ with back-up battery (2,400 mAh, 10.8 V), optional
Power consumption	0.45 W ... 2.45 W Depending on electronics configuration
Integrated components	Integrated pressure sensor and temperature sensor for correction of pressure and temperature effects (option)

Volume correction

Correction method	PTZ (optional integrated)
Compressibility	SGERG88 AGA 8 Gross method 1 AGA 8 Gross method 2 AGA NX-19 AGA NX-19 mod. NX-19 mod. (GOST) GERG91 mod. (GOST) Fixed value
Data archives	1 diagostics archive (6,000 entries) 2 measurement periodic archives (6,000 entries each)
Logbooks	Event log book (1,000 entries) Parameter log book (200 entries) Metrology log book (50 entries)

Measuring ranges

Measuring ranges, metric

Nominal pipe size	Extendet flow rate range acc. MID				
		Standard flow rate range acc. MID			
	Extended MID minimum flow rate	Standard MID minimum flow rate	MID transition flow rate	MID maximum flow rate	Non-MID maximum flow rate
	m³/h	m³/h	m³/h	m³/h	m³/h
	Extended Q_{min}	Standard Q_{min}	Acc. ISO 17089 Q_t	Standard Q_{max}	Extended Q_{max}
DN 80 (3″)	5	8	40	650	1,000
DN 100 (4″)	8	13	65	1,000	1,600
DN 150 (6″)	16	20	100	2,500	3,000
DN 200 (8″)	20	32	160	4,000	4,500
DN 250 (10″)	25	50	240	6,500	7,000
DN 300 (12″)	35	65	310	7,800	8,000
DN 350 (14″)	45	80	420	10,000	10,000
DN 400 (16″)	60	120	550	13,000	14,000
DN 450 (18″)	100	130	700	16,000	17,000
DN 500 (20″)	130	200	850	20,000	20,000
DN 550 (22″)	150	260	1,000	24,000	24,000
DN 600 (24″)	180	320	1,200	28,000	32,000
DN 650 (26″)	240	450	1,400	32,000	35,000
DN 700 (28″)	280	650	1,700	36,000	40,000
DN750 (30″)	320	650	1,900	40,000	45,000
DN 800 (32″)	360	800	2,200	43,000	50,000
DN 850 (34″)	400	900	2,500	47,000	55,000
DN 900 (36″)	450	1,000	2,800	51,000	66,000
DN 950 (38″)	500	1,100	3,100	56,000	70,000
DN 1000 (40″)	550	1,200	3,400	60,000	80,000
DN 1050 (42″)	600	1,300	3,800	65,000	85,000
DN 1100 (44″)	650	1,400	4,100	70,000	90,000
DN 1150 (46″)	700	1,500	4,500	72,000	95,000
DN 1200 (48″)	750	1,600	4,800	80,000	100,000
DN 1300 (52″)	900	1,700	5,600	90,000	110,000
DN 1400 (56″)	1,000	1,800	6,500	100,000	120,000
When using an installation configuration with flow conditioner the maximum allowed gas velocity in the pipe is limited to 40 m/s					

Measuring ranges, imperial

Nominal pipe size	Extendet flow rate range acc. MID				
		Standard flow rate range acc. MID			
	Extended MID minimum flow rate	Standard MID minimum flow rate	MID transition flow rate	MID maximum flow rate	Non-MID maximum flow rate
	Ft^3/h	Ft^3/h	Ft^3/h	Ft^3/h	Ft^3/h
	Extended Q_{min}	Standard Q_{min}	Acc. ISO 17089 Q_t	Standard Q_{max}	Extended Q_{max}
3″ (DN 80)	180	280	1,400	23,000	35,000
4″ (DN 100)	290	460	2,300	35,300	56,000
6″ (DN 150)	570	710	3,500	88,000	106,000
8″ (DN 200)	710	1,130	5,700	141,300	159,000
10″ (DN 250)	880	1,800	8,500	230,000	247,000
12″ (DN 300)	1,200	2,300	10,900	276,000	283,000
14″ (DN 350)	1,600	2,800	14,800	353,000	354,000
16″ (DN 400)	2,100	4,200	19,400	459,000	495,000
18″ (DN 450)	3,500	4,600	24,700	565,000	602,000
20″ (DN 500)	4,600	7,100	30,000	706,000	708,000
22″ (DN 550)	5,300	9,200	35,000	848,000	850,000
24″ (DN 600)	6,400	11,300	42,000	989,000	1,133,000
26″ (DN 650)	8,500	15,900	49,000	1,130,000	1,240,000
28″ (DN 700)	9,900	23,000	60,000	1,271,000	1,420,000
30″ (DN 750)	11,300	23,000	67,000	1,413,000	1,590,000
32″ (DN 800)	12,700	28,300	78,000	1,519,000	1,770,000
34″ (DN 850)	14,200	31,800	88,000	1,660,000	1,950,000
36″ (DN 900)	15,900	35,300	99,000	1,801,000	2,337,000
38″ (DN 950)	17,700	38,800	109,000	1,978,000	2,479,000
40″ (DN 1000)	19,500	42,400	120,000	2,119,000	2,833,000
42″ (DN 1050)	21,200	45,900	134,000	2,296,000	3,010,000
44″ (DN 1100)	23,000	49,400	145,000	2,472,000	3,187,000
46″ (DN 1150)	24,800	53,000	159,000	2,543,000	3,364,000
48″ (DN 1200)	26,600	56,500	170,000	2,825,000	3,541,000
52″ (DN 1300)	31,800	60,000	198,000	3,178,000	3,885,000
56″ (DN 1400)	35,300	63,600	230,000	3,532,000	4,238,000
When using an installation configuration with flow conditioner the maximum allowed gas velocity in the pipe is limited to 131 ft/s					

Ordering information

Our regional sales organization will help you to select the optimum device configuration.

Dimensional drawings (Dimensions in mm (inch))

FLOWSIC600-XT and FLOWSIC600-XT Forte

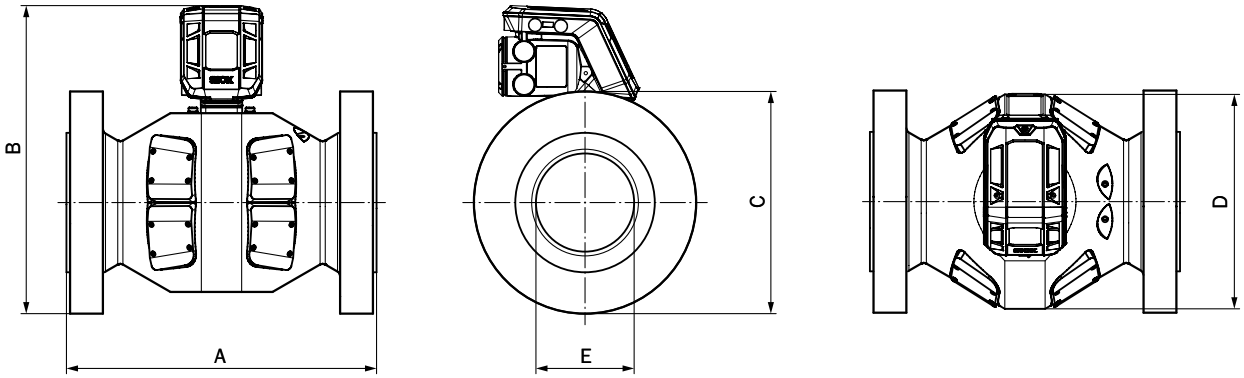

FLOWSIC600-XT 2plex and FLOWSIC600-XT Quatro

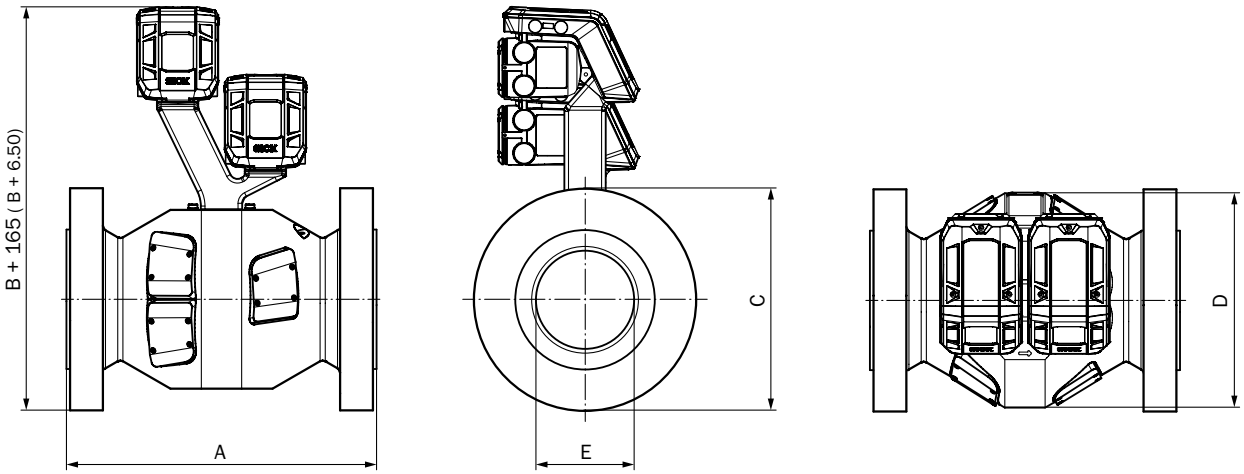

FLOWSIC600-XT: 3” design for up to Class 600/PN100 pressure levels

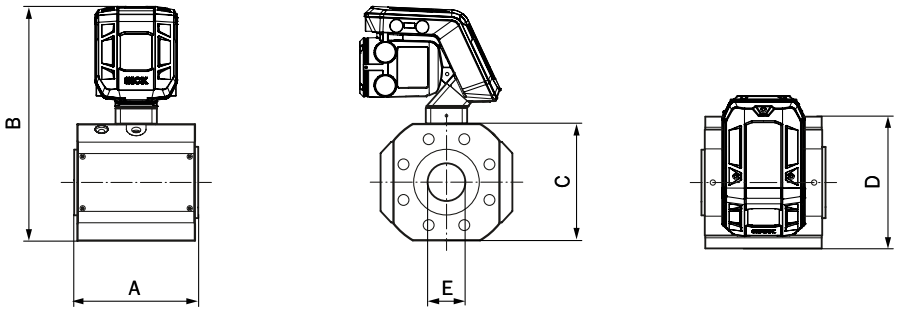

Instruction for installation

Installation of FLOWSIC600-XT in pipeline for unidirectional use (minimum requirements)

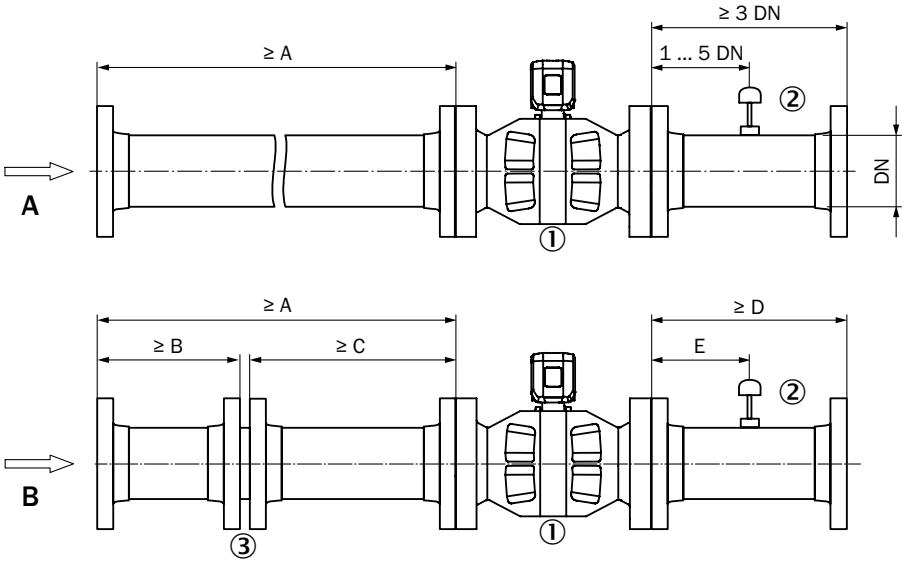

① FLOWSIC600-XT
② Temperature measuring point
③ Flow conditioner

Configuration A			Configuration B						
Number of measuring paths	**OIML R 137**	**A**	**Number of measuring paths**	**OIML R 137 A** [1]	**A**	**B**	**C**	**D**	**E**
4	Class 1.0	10 DN	**4**	Class1.0	5 DN	2 DN	3 DN	3 DN	1 ... 5 DN
8	Class 1.0	2 DN	**4**	Class 0.5	10 DN	2 DN	8 DN	3 DN	1 ... 5 DN
8	Class 0.5	5 DN	**8**	Class 1.0/0.5	5 DN	2 DN	3 DN	3 DN	1 ... 5 DN
Number of measuring paths	**AGA Report 9, 3rd Edition, July 2017**	**A**	**Number of measuring paths**	**AGA Report 9, 3rd Edition, July 2017** [2]	**A**	**B**	**C**	**D**	**E**
4	"Metering package performance" acc. § 6.3	20 DN	**4**	"Metering package performance" acc. § 6.3	10 DN	5 DN	5 DN	5 DN	2.5 DN
8	"Metering package performance" acc. § 6.3	5 DN	**8**	"Metering package performance" acc. § 6.3	5 DN	2 DN	3 DN	5 DN	2.5 DN

[1] Minimum requirements with PTB flow conditioner; recommended installation for other flow conditioners on request

[2] Minimum requirements with CPA 50 E flow conditioner; recommended installation for other flow conditioners on request

Installation of FLOWSIC600-XT in pipeline for bidirectional use (minimum requirements)

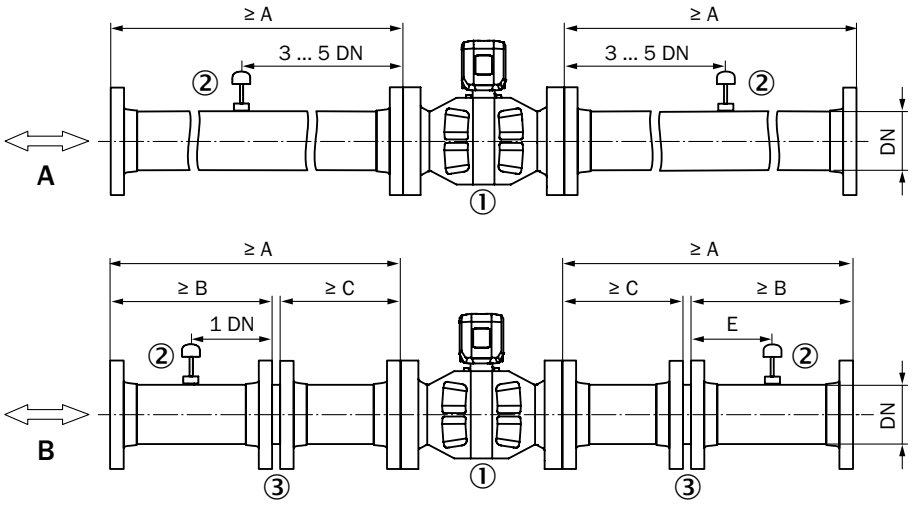

① FLOWSIC600-XT
② Alternative temperature measurement points
③ Flow conditioner

Configuration A			Configuration B					
Number of measuring paths	**OIML R 137**	**A**	**Number of measuring paths**	**OIML R 137 A** [1]	**A**	**B**	**C** [3]	**E**
4	Class 1.0	10 DN	**4**	Class 1.0	5 DN	2 DN	3 DN	1 DN
8	Class 1.0	5 DN	**4**	Class 0.5	10 DN	2 DN	8 DN	1 DN
8	Class 0.5	5 DN	**8**	Class 1.0/0.5	5 DN	2 DN	3 DN	1 DN
Number of measuring paths	**AGA report 9, 3rd Edition, July 2017**	**A**	**Number of measuring paths**	**AGA report 9, 3rd Edition, July 2017** [2]	**A**	**B**	**C**	**D** [4]
4	"Metering package performance" acc. § 6.3	20 DN	**4**	"Metering package performance" acc. § 6.3	10 DN	5 DN	5 DN	2,5 DN
8	"Metering package performance" acc. § 6.3	5 DN	**8**	"Metering package performance" acc. § 6.3	6 DN	3 DN	3 DN	2,5 DN

[1] Minimum requirements with PTB flow conditioner; recommended installation for other flow conditioners on request

[2] Minimum requirements with CPA 50 E flow conditioner; recommended installation for other flow conditioners on request

[3] When C ≥ 5 DN, the temperature measuring point in pipe section C must be positioned with a distance of 3 ... 5 DN

[4] Meter packages shall be flow calibrated with thermowells installed

Dimensions

Nominal pipe size	Connection flange	Standard	Weight [1]	Length (A)	Hight [2] (B)	Flange diameter (C)	Width of measuring section (D)	Internal diameter (E)
			[kg]	[mm]	[mm]	[mm]	[mm]	[mm]
3″	Cl. 150	ANSI B16.5	75	240	454	190	205	73
	Cl. 300		75		454	210		
	Cl. 600		75		454	210		
	Cl. 900		120	400	461	240		
DN 80	PN 16	DIN 2633	75	240	454	200		
	PN 63	DIN 2636	75		454	215		
	PN 100	DIN 2637	75		454	230		
4″	Cl. 150	ANSI B16.5	100	300	490	230	248	95
	Cl. 300		110		490	255		
	Cl. 600		120		490	275		
	Cl. 900		130	500	490	290		
DN 100	PN 16	DIN 2633	110	300	490	220		
	PN 63	DIN 2636	120		490	250		
	PN 100	DIN 2637	126		490	265		
6″	Cl. 150	ANSI B16.5	128	450	540	280	330	142
	Cl. 300		145		540	320		
	Cl. 600		170		540	355		
	Cl. 900		238	750	540	380		
DN 150	PN 16	DIN 2633	140	450	540	285		
	PN 63	DIN 2636	162		540	345		
	PN 100	DIN 2637	176		540	355		
8″	Cl. 150	ANSI B16.5	255	600	617	345	415	190
	Cl. 300		276		617	380		
	Cl. 600		316		617	420		
	Cl. 900		360		617	470		
DN 200	PN 16	DIN 2633	260		617	340		
	PN 63	DIN 2636	298		617	415		
	PN 100	DIN 2637	360		617	430		
10″	Cl. 150	ANSI B16.5	377	750	691	405	420	235
	Cl. 300		411		691	445		
	Cl. 600		485		691	510		
	Cl. 900		528		691	545		
DN 250	PN 16	DIN 2633	383		691	405		
	PN 63	DIN 2636	434		691	470		
	PN 100	DIN 2637	486		691	505		
12″	Cl. 150	ANSI B16.5	445	900	728	485	500	270
	Cl. 300		494		728	520		
	Cl. 600		560		728	560		
	Cl. 900		645		685	610		
DN 300	PN 16	DIN 2633	441		728	460		
	PN 63	DIN 2636	509		728	530		
	PN 100	DIN 2637	585		638	585		

Nominal pipe size	Connection flange	Standard	Weight [1]	Length (A)	Hight [2] (B)	Flange diameter (C)	Width of measuring section (D)	Internal diameter (E)
			[kg]	[mm]	[mm]	[mm]	[mm]	[mm]
14″	Cl. 150	ANSI B16.5	475	1,050	642	535	540	315
	Cl. 300		600		667	585		
	Cl. 600		675		677	605		
	Cl. 900		850		700	640		
DN 350	PN 16	DIN 2633	475		635	520		
	PN 63	DIN 2636	625		675	600		
	PN 100	DIN 2637	750		705	655		
Fore al meters ≥ 16″ an installation length of 3D is optionally available								
16″	Cl. 150	ANSI B16.5	672	762	844	595	610	360
	Cl. 300		760		844	650		
	Cl. 600		857		844	685		
	Cl. 900		926	800	755	705		
DN 400	PN 16	DIN 2633	658	762	844	580		
	PN 63	DIN 2636	794		844	670		
18″	Cl. 150	ANSI B16.5	660	820	754	635	620	405
	Cl. 300		760		792	710		
	Cl. 600		960		820	745		
	Cl. 900		1,300	900	830	785		
DN 450	Data on request							
20″	Cl. 150	ANSI B16.5	750	902	815	700	670	450
	Cl. 300		930		853	775		
	Cl. 600		1,080		872	815		
	Cl. 900		1,500	1,000	892	855		
DN 500	PN 16	DIN 2633	700	902	823	715		
22″	Data on request							
DN 550	Data on request							
24″	Cl. 150	ANSI B16.5	1,090	991	927	815	760	540
	Cl. 300		1,390		978	915		
	Cl. 600		1,615		990	940		
	Cl. 900		2,100	1,200	1,040	1,040		
DN 600	PN 16	DIN 2633	1,015	991	940	840		
26″	Cl. 150	ASME B16.47	1,475	1,050	965	870	828	585
	Cl. 300		1,825		1,016	972		
	Cl. 600		2,100		1,038	1,016		
	Cl. 900		2,500	1,250	1,073	1,086		
DN 650	Data on request							
28“	Cl. 150	ASME B16.47	1,950	1,100	1,027	927	862	630
	Cl. 300		2,225		1,080	1,035		
	Cl. 600		2,450		1,100	1,073		
	Cl. 900		3,000	1,300	1,150	1,169		
DN 700	Data on request							

Nominal pipe size	Connection flange	Standard	Weight [1]	Length (A)	Hight [2] (B)	Flange diameter (C)	Width of measuring section (D)	Internal diameter (E)
			[kg]	[mm]	[mm]	[mm]	[mm]	[mm]
30″	Cl. 150	ASME B16.47	2,195	1,150	1,080	985	902	675
	Cl. 300		2,545		1,135	1,092		
	Cl. 600		2,820		1,154	1,130		
	Cl. 900		3,350	1,350	1,205	1,232		
DN 750	Data on request							
32″	Cl. 150	ASME B16.47	2,485	1,200	1,145	1,061	979	720
	Cl. 300		2,835		1,190	1,150		
	Cl. 600		3,110		1,212	1,194		
	Cl. 900		3,800	1,400	1,272	1,315		
DN 800	Data on request							
34″	Data on request							
DN 850	Data on request							
36″	Cl. 150	ASME B16.47	3,125	1,250	1,250	1,169	1,082	810
	Cl. 300		3,525		1,300	1,270		
	Cl. 600		3,850		1,323	1,315		
	Cl. 900		5,225	1,450	1,396	1,461		
DN 900	Data on request							
38″	Cl. 150	ASME B16.47	3,800	1,300	1,310	1,238	1,160	855
	Cl. 300		3,725		1,275	1,169		
	Cl. 600		4,300		1,325	1,270		
	Cl. 900		Data on request		1,421	1,461		
DN 950	Data on request							
40″	Cl. 150	ASME B16.47	3,825	1,350	1,359	1,289	1,213	900
	Cl. 300		4,125		1,334	1,239		
	Cl. 600		4,675		1,375	1,321		
	Cl. 900		Data on request		1,470	1,512		
DN 1000	Data on request							
42″	Cl. 150	ASME B16.47	4,675	1,450	1,415	1,346	1,261	945
	Cl. 300		4,650		1,386	1,289		
	Cl. 600		5,450		1,444	1,404		
	Cl. 900		Data on request		1,523	1,562		
DN 1050	Data on request							
44″	Data on request							
DN 1100	Data on request							
46″	Data on request							
DN 1150	Data on request							
48″	Cl. 150	ASME B16.47	6,400	1,600	1,574	1,511	1,416	1,080
	Cl. 300		6,475		1,552	1,467		
	Cl. 600		7,850		1,615	1,594		
	Cl. 900		12,100	1,900	1,711	1,785		
DN 1200	Data on request							

[1] Devices with single SPU; devices with double SPU: weight + 7 kg

[2] Optional neck extension: B + 200 mm

REGISTER AT WWW.SICK.COM TODAY AND ENJOY ALL THE BENEFITS

- Select products, accessories, documentation and software quickly and easily.
- Create, save and share personalized wish lists.
- View the net price and date of delivery for every product.
- Requests for quotation, ordering and delivery tracking made easy.
- Overview of all quotations and orders.
- Direct ordering: submit even very complex orders in moments.
- View the status of quotations and orders at any time. Receive e-mail notifications of status changes.
- Easily repeat previous orders.
- Conveniently export quotations and orders to work with your systems.

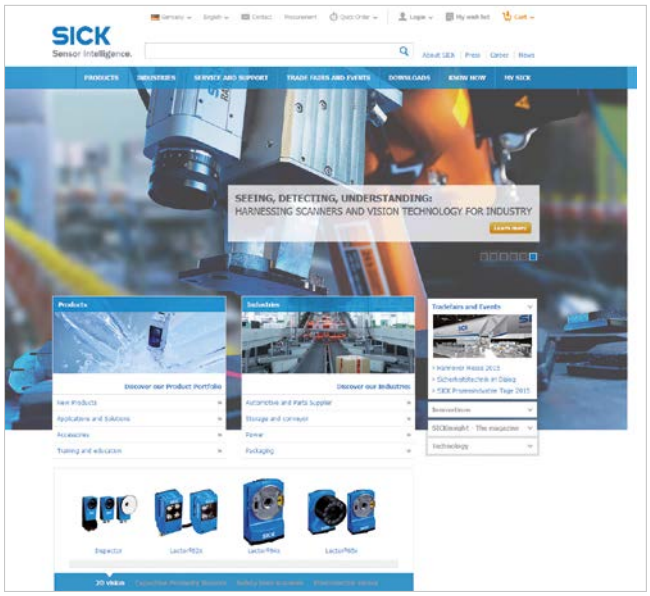

SERVICES FOR MACHINES AND SYSTEMS: SICK LifeTime Services

Our comprehensive and versatile LifeTime Services are the perfect addition to the comprehensive range of products from SICK. The services range from product-independent consulting to traditional product services.

Consulting and design
Safe and professional

Product and system support
Reliable, fast and on-site

Verification and optimization
Safe and regularly inspected

Upgrade and retrofits
Easy, safe and economical

Training and education
Practical, focused and professional

8018938/2017-12 · 4MPS · Pre USmod en47

SICK AT A GLANCE

SICK is a leading manufacturer of intelligent sensors and sensor solutions for industrial applications. With almost 8,000 employees and over 50 subsidiaries and equity investments as well as numerous representative offices worldwide, we are always close to our customers. A unique range of products and services creates the perfect basis for controlling processes securely and efficiently, protecting individuals from accidents and preventing damage to the environment.

We have extensive experience in various industries and understand their processes and requirements. With intelligent sensors, we can deliver exactly what our customers need. In application centers in Europe, Asia and North America, system solutions are tested and optimized in accordance with customer specifications. All this makes us a reliable supplier and development partner.

Comprehensive services round out our offering: SICK LifeTime Services provide support throughout the machine life cycle and ensure safety and productivity.

For us, that is "Sensor Intelligence."

Worldwide presence:

Australia, Austria, Belgium, Brazil, Canada, Chile, China, Czech Republic, Denmark, Finland, France, Germany, Great Britain, Hungary, India, Israel, Italy, Japan, Malaysia, Mexico, Netherlands, New Zealand, Norway, Poland, Romania, Russia, Singapore, Slovakia, Slovenia, South Africa, South Korea, Spain, Sweden, Switzerland, Taiwan, Thailand, Turkey, United Arab Emirates, USA, Vietnam.

Detailed addresses and additional representatives → www.sick.com

SICK
Sensor Intelligence.